JLBOX

JIANLONG ELECTRICAL

ELECTRICAL · ELECTRONIC ENCLOSURE JLBOX

www.jlbox.com.cn

Brief Introduction

Jiangsu Jianlong Electrical Co., Ltd was founded in 1992, employs more than 500 staff. After many years of development, the company has become a fairly powerful enterprise, owes independent import and export distribution rights, has made remarkable achievements in product design, mold, metal, plastic and aluminum castings, etc. Our products are exported to the United Kingdom, Australia, New Zealand, Germany, the Netherlands and other countries. The company is the first enterprise got the British BSI KM71062 products certification in Jiangsu Province and passed the British BSI ISO9001 international quality system certification.

With the company expanding and the aim of providing customers with better solution for electrical, Jiangsu Jianlong Electrical Co., Ltd developed the big current industrial coupler, which was made of copper alloy and aluminum, with protection grade up to IP66. This kind of product can be widely used in ports, mines, power plants and other harsh environments. Jiangsu Jianlong Electrical Co., Ltd is the first company to receive 250A industrial coupler national mandatory 3C certification and product safety inspection reports.

Welcome to JLBOX world

The high-quality self-developed JLBOX Series -- enclosure, window enclosure, etc has obtained the “the utility model patent certificate”, which was issued by State Intellectual Property Office. JLBOX are made of imported ABS, PC materials. This kind of product can meet the requirements for outdoor, indoor or dust prevention, water proofing, anti-corrosion and other special occasions. JLBOX are the first to achieve the protection grade of IP67 and pass the detection by national authoritative department STIEE.

After many years of development, Jiangsu Jianlong Electrical Co., Ltd has bought advanced, high-quality stamping equipments, with the spirit of “never-ending technological innovation” and based on the foundation of traditional mold. At the same time, Jiangsu Jianlong Electrical Co., Ltd is able to design and make high precision progressive die and fine composite mold. Jiangsu Jianlong Electrical Co., Ltd pays a lot of attention to quality and innovation all the time, each product represents the first-class quality and excellent service. We sincerely in the hope that we could bring new value and more surprises to all customers!

Patent and Certificate

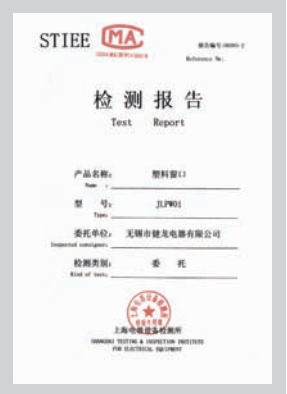

ELECTRICAL · ELECTRONIC ENCLOSURE

JLBOX ELECTRICAL · ELECTRONIC

Dust-Proof
Water-Proof
Anti-Corrosion

Contents

- **About Jianlong**
- **Patent and Certificate**
- JLBOX IP/IK classifications 07
- Product superiority and Customizing services 08
- Characteristics of JLBOX plastic enclosure 09
- JLBOX-S (screw bolt type) 10-12
- JLBOX-P (Integrated plastic hinge type) 13-15
- JLBOX dual door 16
- JLBOX- J Junction box 17
- JLBOX- N Button box 18
- JLBOX- PW Window box 19-20
- Accessories 21
- **Equipments**

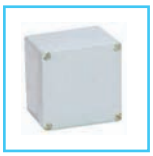

The IP/IK Classifications

※ Water, dust-proof grade IP67/66, degree of strength IK08

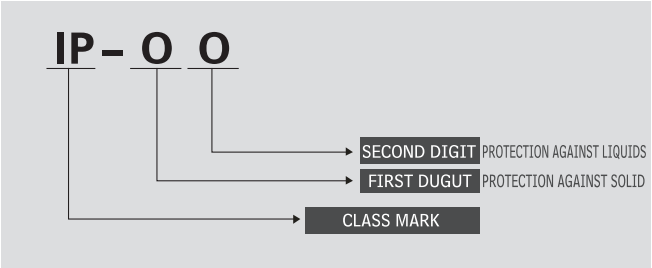

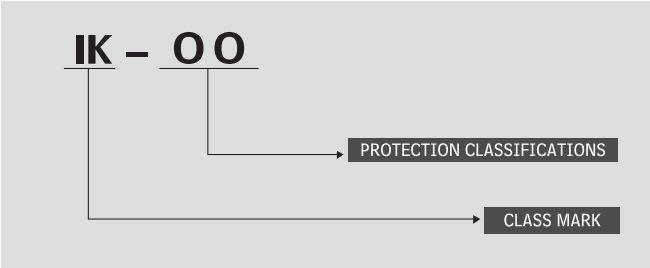

IEC (international Electrotechnical Commission) defines protection structure of electric instruments or protection boxes as follows.

FIRST NUMBER	PROTECTION AGAINISTSOLID	SECOND NUMBE	PROTECTION AGAINIST LIQUIDS	IK CODE	PROTECTIONAGAINIST MECHANICALIMPACT
IP	TEST	IP	TEST	IK	TEST
0	No protection	0	No protection	0	No protection
1	Protected trom solid with size of 50mm over(hand)	1	Protected from falling object vertically	01-05	Impact 〈 1 joule
2	Protected trom solid with size of 12.5mm over(finger size)	2	Protected from falling object with 15° slant	06	500g 20cm Impact=1 joule
3	Protected trom solid with size of 2.5mm over(tool,wire size)	3	Protected from spray with up to 60° slant	07	500g 40cm Impact=2 joule
4	Protected trom solid with size of 1mm over(tool,wire size)	4	Protected from spray of all directions	08	1.7kg 29.5cm Impact=5joule
5	Protected from dust	5	Protected from water sprayed with low pressure	09	5kg 20cm Impact=10 joule
6	Protected trom dust perfectly	6	Protected from water sprayed with high pressure	10	5kg 40cm Impact=20 joule
		7	Protected from sink in water 15cm–1m depth for 30 minutes		
		8	Protected from sink in water with pressure for a long time		

Product superiority and Customizing services

Product Superiority

The high-quality self-developed JLBOX Series enclosure, window enclosure, etc has obtained the "Certificate of Utility Model Patent", which was issued by State Intellectual Property Office. JLBOX are made of imported ABS, PC materials. This kind of product can meet the requirements for outdoor, indoor or dust prevention, water proofing, anti-corrosion and other special occasions. JLBOX are the first to achieve the protection grade of IP67and pass the detection by national authoritative department STIEE.

JLBOX Customizing services

JLBOX is the industry leader in developing both new products and new technologies for injection oulding thermoplastic enclosures. JLBOX has developed a comprehensive range of services, permitting cost effective customization for specific applications.

Machining services

Our sophisticated CNC machinery can supply enclosures with holes, cutouts and openings to your specification. This solution is best suited for small to medium volumes of enclosures. The material JLBOX used, make sure all the models can be machined by our CNC machines.

Customized tooling services

For more than two decades of experience, we have made progress in OEM. It is possible to customize the moulding of a standard product to meet the OEM specific needs. Our large mould group, who make sure shorten product development times and permit customizing even those products with projected short life cycles. Your new product reaches the market sooner.

Colored plastic enclosures

JLBOX offers custom moulding of standard enclosures in customer specified colors. Standard color specifications are based upon RAL system, however custom color matching is possible.

Printed enclosures

Mostly, Silk screen printing is recommended for enclosure batches of less than 1000 pieces. This method is mainly suitable for flat surfaces, and can be used for large areas.

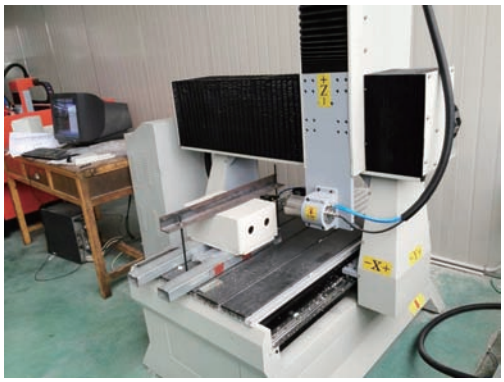

Characteristics of JLBOX plastic enclosure

①

The lock is make by stainless steel so that it can be used under bad condition. The hinge is very strong and easy to remove cover and con.

②

The hinge and the enclosure was made in injection moulding. It also can be separated by professional tool. So it is convenient to make hole or printing.

③

The roof function can protect penet-ration of water and dust when opening/closing the cover.

④

It is strong as screw thread was made in injection moulding.

⑤

Positioning of plastic screw is firm. It is easy to assemble.

⑥

It helps to fix the box tightly as brass insert is inserted in injection molding.

⑦

Make a placeholder for keyhole.

⑧

The mounting plate was made in injection moulding.

⑨

It has excellent water and dust proofing performance as it injects gasket solution with super precise CNC robet machine.

⑩

It used the German technology to invent a unique way to open the enclosure.

IP67/IK08

JL-S

Screw Bolt Type

JLBOX-S screw bolt type

Features

- ◇ Connected by four plastic screws.
- ◇ Could be mounted on the wall directly with mounting holes on the bottom.
- ◇ With mounting plate inside. Ideally suited for mounting printed circuit boards or DIN rail mounted components.
- ◇ Material - General purpose ABS plastic or PC plastic. (Custom materials available) Recommended for both outdoor and indoor use.
- ◇ Color is a light grey.
- ◇ Designed to meet IP67 and IK08. The temperature ranges from -40℃- +85℃ (ABS plastics), or -40℃- +120℃ (PC plastics).

Application

- ◇ Designed to enclose electrical and/or electronic equipment and protect against harsh, industrial environments.
- ◇ For use as instrument enclosures, electric, hydraulic or pneumatic control housings, electrical junction boxes or terminal wiring enclosures.

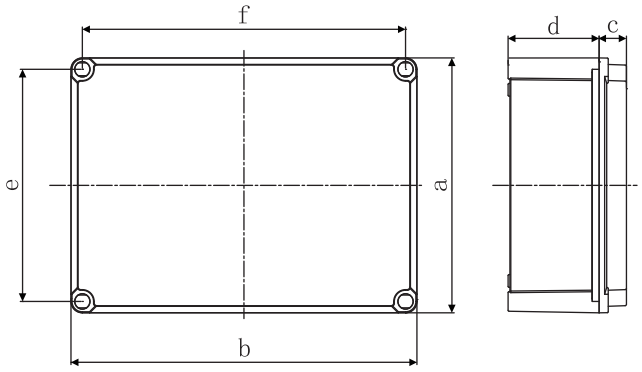

Model and size

Model	Specifications	Long / mm	Wide / mm	Cover / mm	Base / mm	Hole Distance / mm	Hole Distance / mm
		a	b	c	d	e	f
JL-□□S-050604	50 x65x45	50	60	15	30	37	52
JL-□□S-050605	50x65x55	50	60	15	40	37	52
JL-□□S-061570	60x150x70	60	150	15	55	47	117
JL-□□S-060905	65x95x55	65	95	15	40	47	77
JL-□□S-071005	75x105x55	75	105	15	40	57	87
JL-□□S-080806	80x80x60	80	80	15	45	62	62
JL-□□S-081104	80x110x45	80	110	15	30	62	92
JL-□□S-081107	80x110x70	80	110	15	55	62	92
JL-□□S-081108	80x110x85	80	110	15	70	62	92
JL-□□S-081307	80x130x70	80	130	15	55	62	112
JL-□□S-081308	80x130x85	80	130	15	70	62	112
JL-□□S-081605	80x160x55	80	160	15	40	68	148
JL-□□S-081608	80x160x85	80	160	15	70	68	148
JL-□□S-081807	80x180x70	80	180	15	55	62	162

JLBOX-S screw bolt type

Model and size

Model	Specifications	Long / mm	Wide / mm	Cover / mm	Base / mm	Hole Distance / mm	Hole Distance / mm
		a	b	c	d	e	f
JL-□□S-081808	80x180x85	80	180	15	70	62	162
JL-□□S-082507	80x250x70	80	250	15	55	67	217
JL-□□S-082508	80x250x85	80	250	15	70	62	232
JL-□□S-101005	101x101x50	101	101	12	38	88	88
JL-□□S-101010	100x100x100	100	100	20	80	82	82
JL-□□S-101807	100x185x70	100	185	15	55	82	167
JL-□□S-102007	100x200x70	100	200	15	55	82	182
JL-□□S-102307	100x230x70	100	230	15	55	82	212
JL-□□S-121609	120x160x95	120	160	30	65	104	124
JL-□□S-121207	125x125x75	125	125	20	55	105	105
JL-□□S-121210	125x125x100	125	125	20	80	105	105
JL-□□S-121707	125x175x75	125	175	25	50	109	157
JL-□□S-121710	125x175x100	125	175	50	50	109	157
JL-□□S-141709	140x170x95	140	170	20	75	122	152
JL-□□S-142309	140x230x95	140	230	20	75	122	212
JL-□□S-151507	150x150x75	150	150	20	55	110	132
JL-□□S-151509	150x150x90	150	150	20	70	112	134
JL-□□S-152007	150x200x75	150	200	20	55	132	182
JL-□□S-152011	150x200x110	150	200	30	80	132	182
JL-□□S-152013	150x200 x130	150	200	50	80	132	182
JL-□□S-152016	150x200x 160	150	200	50	110	132	182
JL-□□S-152510	150x250x100	150	250	20	80	132	232
JL-□□S-152513	150x250x130	150	250	50	80	132	232
JL-□□S-161607	160x160x70	160	160	15	55	110	142
JL-□□S-171709	175x175x90	175	175	30	60	157	157
JL-□□S-182213	180x220x130	180	220	30	100	162	202
JL-□□S-191913	190x190x130	190	190	30	100	165	165
JL-□□S-192813	190x280x130	190	280	30	100	165	255
JL-□□S-192818	190x280x180	190	280	30	150	165	255
JL-□□S-193813	190x380x130	190	380	30	100	165	355
JL-□□S-193818	190x380x180	190	380	30	150	165	355
JL-□□S-202010	200x200x100	200	200	20	80	132	182
JL-□□S-202013	200x200x130	200	200	20	110	132	182
JL-□□S-202016	200x200x160	200	200	50	110	132	182
JL-□□S-203015	200x300x150	200	300	30	120	178	278
JL-□□S-204015	200x400x150	200	400	30	120	178	378
JL-□□S-223215	220x320x150	220	320	30	120	198	298
JL-□□S-232615	230x260x150	230	260	30	120	208	238
JL-□□S-273015	270x300x150	270	300	45	105	244	274
JL-□□S-274616	270x460x160	270	460	55	105	244	434
JL-□□S-274623	270x460x235	270	460	130	105	244	274
JL-□□S-282813	280x280x130	280	280	30	100	255	255
JL-□□S-283413	280x340x130	280	340	30	100	255	315
JL-□□S-283813	280x380x130	280	380	30	100	255	355
JL-□□S-283818	280x380x180	280	380	30	150	255	355
JL-□□S-285613	280x560x130	280	560	30	100	255	505
JL-□□S-304016	300x400x160	300	400	55	105	274	374
JL-□□S-305216	300x520x160	300	520	55	105	274	494
JL-□□S-334318	330x430x180	330	430	55	125	305	405
JL-□□S-365418	360x540x180	360	540	55	125	335	515
JL-□□S-385618	380x560x180	380	560	30	150	276	458

IP67/IK08

JL-P

Integrated Plastic Hinge Type

JLBOX-P Integrated plastic hinge type

Features

- ◇ Opened by chains, and be equipped with locksets and hasps.
- ◇ With mounting plate inside. Material - General purpose ABS plastic or PC plastic. (Custom materials available). Recommended for both outdoor and indoor use.
- ◇ Color is a light grey.
- ◇ Designed to meet IP67 and IK08. The temperature ranges from -40℃- +85℃(ABS plastics), or -40℃- +120℃ (PC plastics).

Application

- ◇ Designed to enclose electrical and/or electronic equipment and protect against harsh, industrial environments.
- ◇ For use as instrument enclosures, electric, hydraulic or pneumatic control housings, electrical junction boxes or terminal wiring enclosures.

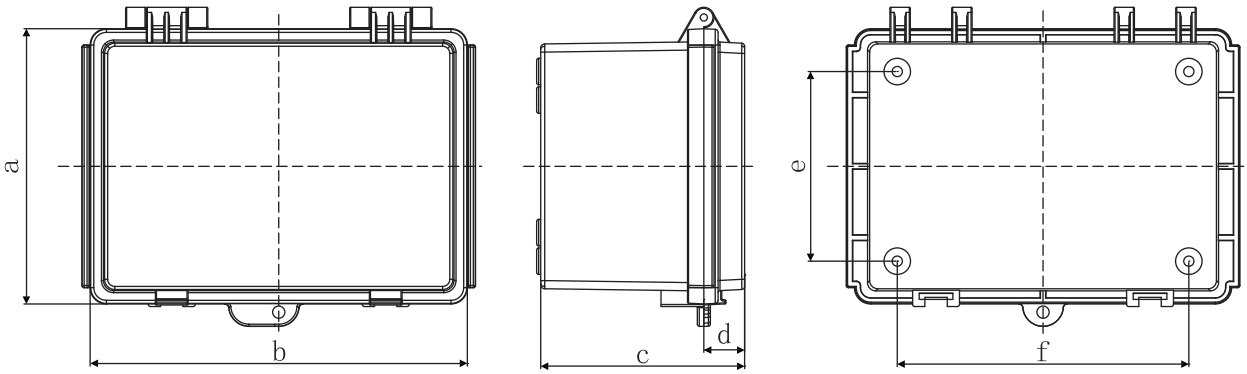

JLBOX-P Integrated plastic hinge type

Model and size

Model	Specifications	Long / mm	Wide / mm	Cover / mm	Base / mm	Hole Distance / mm	Hole Distance / mm
		a	b	c	d	e	f
JL-□□P-091207	90x120x 70	90	120	20	50	50	80
JL-□□P-091208	90x120 x 85	90	120	20	65	50	80
JL-□□P-101507	100x150x70	100	150	20	50	60	110
JL-□□P-101508	100x150x85	100	150	20	65	60	110
JL-□□P-112107	110x210x75	110	210	20	55	70	170
JL-□□P-112110	110x210x100	110	210	20	80	70	170
JL-□□P-112607	110x260x75	110	260	20	55	70	220
JL-□□P-112610	110x260x100	110	260	20	80	70	220
JL-□□P-131508	135x155x85	135	155	20	65	105	120
JL-□□P-131808	135x185x85	135	185	20	65	95	145
JL-□□P-131810	135x185x100	135	185	20	80	95	145
JL-□□P-151509	150x150x90	150	150	20	70	120	120
JL-□□P-151512	150x150x120	150	150	20	100	120	120
JL-□□P-162110	160x210x100	160	210	25	75	110	160
JL-□□P-162113	160x210x130	160	210	25	105	120	170
JL-□□P-162610	160x260x100	160	260	25	75	120	220
JL-□□P-162613	160x260x130	160	260	25	105	120	220
JL-□□P-172411	170x240x110	170	240	30	80	120	190
JL-□□P-172711	170x270x110	170	270	30	80	132	232
JL-□□P-192810	190x280x100	190	280	30	70	148	238
JL-□□P-192814	190x280x140	190	280	30	110	148	238
JL-□□P-203013	200x300x135	200	300	30	105	164	248
JL-□□P-203018	200x300x180	200	300	30	150	152	252
JL-□□P-212110	210x210x100	210	210	25	75	170	170
JL-□□P-212113	210x210x130	210	210	25	105	170	170
JL-□□P-222712	225x275x120	225	275	25	95	175	225
JL-□□P-243415	240x340x155	240	340	45	105	190	290
JL-□□P-253515	250x350x150	250	350	30	120	202	302
JL-□□P-253518	250x350x180	250	350	30	150	202	302
JL-□□P-282813	280x280x130	280	280	30	100	238	238
JL-□□P-283813	280x380x130	280	380	30	100	238	338
JL-□□P-303015	300x300x150	300	300	30	120	252	252
JL-□□P-303018	300x300x180	300	300	30	150	252	252
JL-□□P-304013	300x400x135	300	400	30	105	256	347
JL-□□P-304015	300x400x150	300	400	30	120	252	352
JL-□□P-304018	300x400x180	300	400	30	150	252	352
JL-□□P-353515	350x350x150	350	350	30	120	302	302
JL-□□P-353518	350x350x180	350	350	30	150	302	302
JL-□□P-354512	350x450x120	350	450	30	90	300	400
JL-□□P-354516	350x450x160	350	450	30	130	300	400
JL-□□P-354520	350x450x200	350	450	30	170	300	400
JL-□□P-374820	370x480x200	370	480	55	145	320	490
JL-□□P-405016	400x500x160	400	500	30	130	352	452
JL-□□P-405020	400x500x200	400	500	30	130	352	452
JL-□□P-406018	400x600x180	400	600	30	150	352	552
JL-□□P-406023	400x600x230	400	600	30	200	352	552
JL-□□P-503018	560x380x180	560	380	30	150	352	532
JL-□□P-506018	530x630x185	530	630	35	150	462	562
JL-□□P-506025	530x630x235	530	630	35	200	462	562

JLBOX dual door

Features

- ◇ Being furnished with hand shank and hinge is convenient for dual door usage.
- ◇ Installing from four support pillars.
- ◇ With mounting plate inside.

Model and size

Duel door applicable model		Product Model	
Width x Length x Height Unite: mm	Model	Duel Door (Frame, Suppot hinge, Handle included)	Duel Door Medium plate (Aluminum)
200×300×130	JL-□□P-203013	JL-F203013	JL-FA2030
200×300×150	JL-□□P-203015	JL-F203015	JL-FA2030
200×300×180	JL-□□P-203018	JL-F203018	JL-FA2030
250×350×150	JL-□□P-253515	JL-F253515	JL-FA2535
250×350×180	JL-□□P-253518	JL-F253518	JL-FA2535
280×280×130	JL-□□P-282813	JL-F282813	JL-FA2828
280×380×130	JL-□□P-283813	JL-F283813	JL-FA2838
300×300×150	JL-□□P-303015	JL-F303015	JL-FA3030
300×300×180	JL-□□P-303018	JL-F303018	JL-FA3030
300×400×150	JL-□□P-304015	JL-F304015	JL-FA3040
300×400×150	JL-□□P-304018	JL-F304018	JL-FA3040
350×450×160	JL-□□P-354516	JL-F354516	JL-FA3545
350×450×200	JL-□□P-354520	JL-F354520	JL-FA3545
400×500×160	JL-□□P-405016	JL-F405016	JL-FA4050
400×500×200	JL-□□P-405020	JL-F405020	JL-FA4050
400×600×230	JL-□□P-406023	JL-F406023	JL-FA4060

JLBOX-J Junction box

Power distribution system schematic diagram

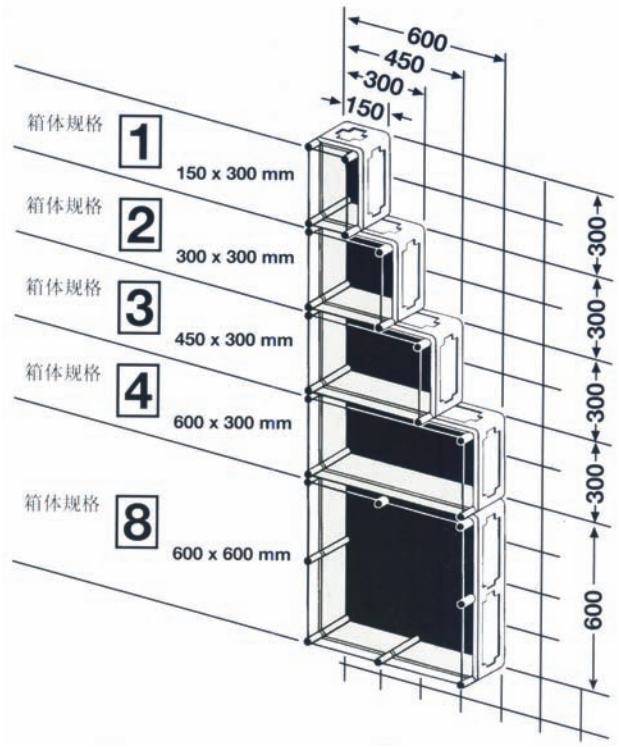

Features

- ◇ Combined Enclosure is suitable for using in severe industrial environment.
- ◇ Ideally suited for mounting printed circuit boards or DIN rail mounted components.
- ◇ Material - General purpose PC plastic. (Custom materials available). Recommended for both outdoor and indoor use.
- ◇ Color is a light grey or transparent.
- ◇ Designed to meet IP65 and IK08. The temperature ranges from -40℃- +120℃.

Model and size

Model	Long / mm	Wide / mm	Cover / mm
	a	b	c
JL-□□J-301516	300	150	160
JL-□□J-303016	300	300	160
JL-□□J-304516	450	300	160
JL-□□J-306016	600	300	160
JL-□□J-606016	600	600	160

JLBOX-N Button box

Features

- ◇ Ideally suited for mounting buttons.
- ◇ Be connected by four stainless steel/plastics screws.
- ◇ Color can be customized.
- ◇ Designed to meet IP67 and IK08. The temperature ranges from -40℃- +85℃(ABS plastics), or -40℃- +120℃(PC plastics).

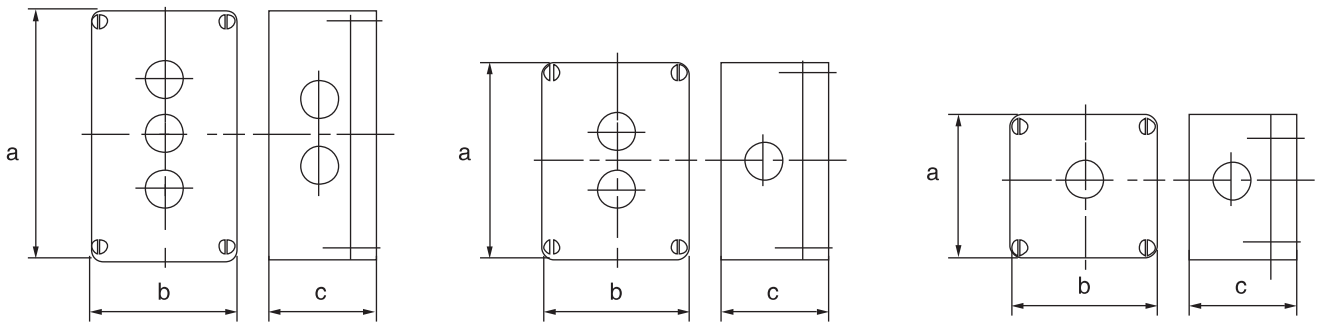

Model and size

Model	Button holes	Specifications	Long / mm	Wide / mm	Cover / mm	Base / mm	Hole Distance / mm	Hole Distance / mm
			a	b	c	d	e	f
JL-N-01	1 Button holes	80x85x65.5	80	85	15	50.5	68	73
JL-N-02	2 Button holes	80x120x65.5	80	120	15	50.5	68	108
JL-N-03	3 Button holes	80x155x65.5	80	155	15	50.5	68	143
JL-N-D	Multi	80x250x70	80	250	15	55	67	217

IP67/IK08

JL-PW

Window Box

JLBOX-PW Window box

JLBOX Window Box Naming

JL - P W K - 06

- 06 → 6 Modules
- K → Wide Window Box
- W → Window Box
- P → PC
- JL → JLBOX

Z:Narrow windows W: Windows without base
K: Wide Windows
Number: the number of modules

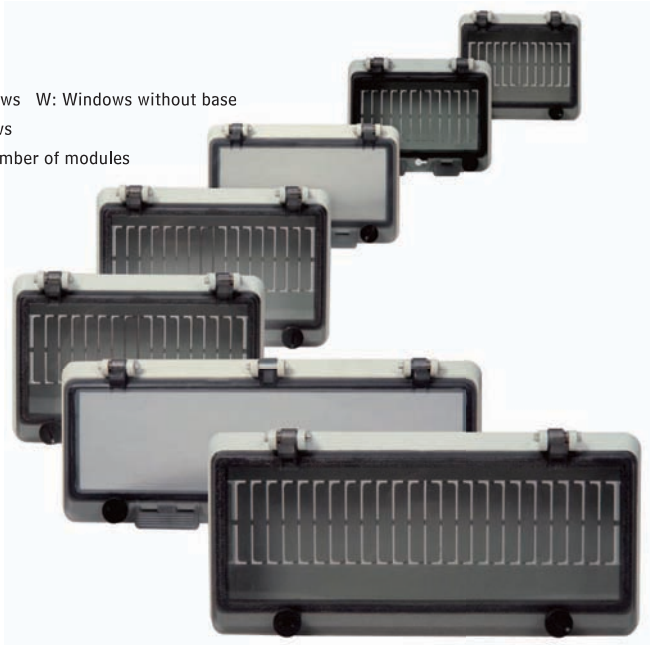

Features

- ◇ It is recommended to be used with enclosure. JLBOX accessory range covers a variety of inspection windows, ventilation and pressure equalizer devices.
- ◇ The degree of protection is IP 67.

JL-PWK Features

Model	Material	Specification	Flame Rating	Enclosure
JL-PWK-06B	PC	130x123x49.8	V2	IP67
JL-PWK-08B	PC	166x123x49.8	V2	IP67
JL-PWK-12B	PC	238x123x49.8	V2	IP67

JL-PWZ Features

Model	Material	Specification	Flame Rating	Enclosure
JL-PWZ-01	PC	40x95.5x19	V2	IP67
JL-PWZ-02	PC	50x82.05x28	V2	IP67
JL-PWZ-03	PC	72.4x95.85x42	V2	IP67
JL-PWZ-04	PC	90.4x95.5x49.8	V2	IP67
JL-PWZ-06	PC	128x95.5x49.8	V2	IP67
JL-PWZ-08	PC	164x95.5x49.8	V2	IP67
JL-PWZ-12	PC	236x95.5x49.8	V2	IP67
JL-PWZ-13	PC	255x95.5x49.8	V2	IP67
JL-PWZ-18	PC	342x495.5x49.8	V2	IP67

JL-PWW Features

Model	Material	Specification	Flame Rating	Enclosure
JL-PWW-03	PC	82.05x68x28	V2	IP67
JL-PWW-06	PC	128x95.5x26.8	V2	IP67
JL-PWW-08	PC	164x95.5x26.8	V2	IP67
JL-PWW-12	PC	236x95.5x26.8	V2	IP67
JL-PWW-13	PC	255x95.5x26.8	V2	IP67

JLBOX-PW Window box

JLBOX Window Box Naming

JL - P W K - 06

- 06 → 6 Modules
- K → Wide Window Box
- W → Window Box
- P → PC
- JL → JLBOX

Z:Narrow windows W: Windows without base
K: Wide Windows
Number: the number of modules

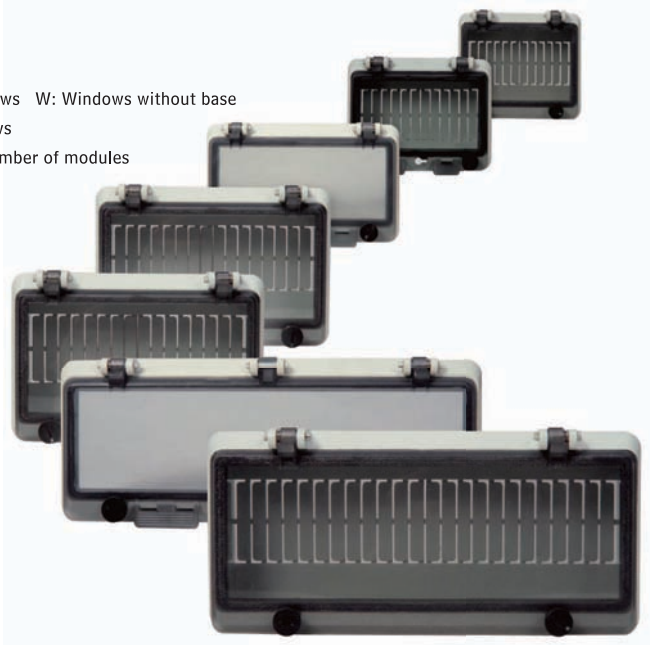

Features

- ◇ It is recommended to be used with enclosure. JLBOX accessory range covers a variety of inspection windows, ventilation and pressure equalizer devices.
- ◇ The degree of protection is IP 67.

JL-PWK

Model	Material	Specification	Flame Rating	Enclosure
JL-PWK-06B	PC	130x123x49.8	V2	IP67
JL-PWK-08B	PC	166x123x49.8	V2	IP67
JL-PWK-12B	PC	238x123x49.8	V2	IP67

JL-PWZ

Model	Material	Specification	Flame Rating	Enclosure
JL-PWZ-01	PC	40x95.5x19	V2	IP67
JL-PWZ-02	PC	50x82.05x28	V2	IP67
JL-PWZ-03	PC	72.4x95.85x42	V2	IP67
JL-PWZ-04	PC	90.4x95.5x49.8	V2	IP67
JL-PWZ-06	PC	128x95.5x49.8	V2	IP67
JL-PWZ-08	PC	164x95.5x49.8	V2	IP67
JL-PWZ-12	PC	236x95.5x49.8	V2	IP67
JL-PWZ-13	PC	255x95.5x49.8	V2	IP67
JL-PWZ-18	PC	342x495.5x49.8	V2	IP67

JL-PWW

Model	Material	Specification	Flame Rating	Enclosure
JL-PWW-03	PC	82.05x68x28	V2	IP67
JL-PWW-06	PC	128x95.5x26.8	V2	IP67
JL-PWW-08	PC	164x95.5x26.8	V2	IP67
JL-PWW-12	PC	236x95.5x26.8	V2	IP67
JL-PWW-13	PC	255x95.5x26.8	V2	IP67

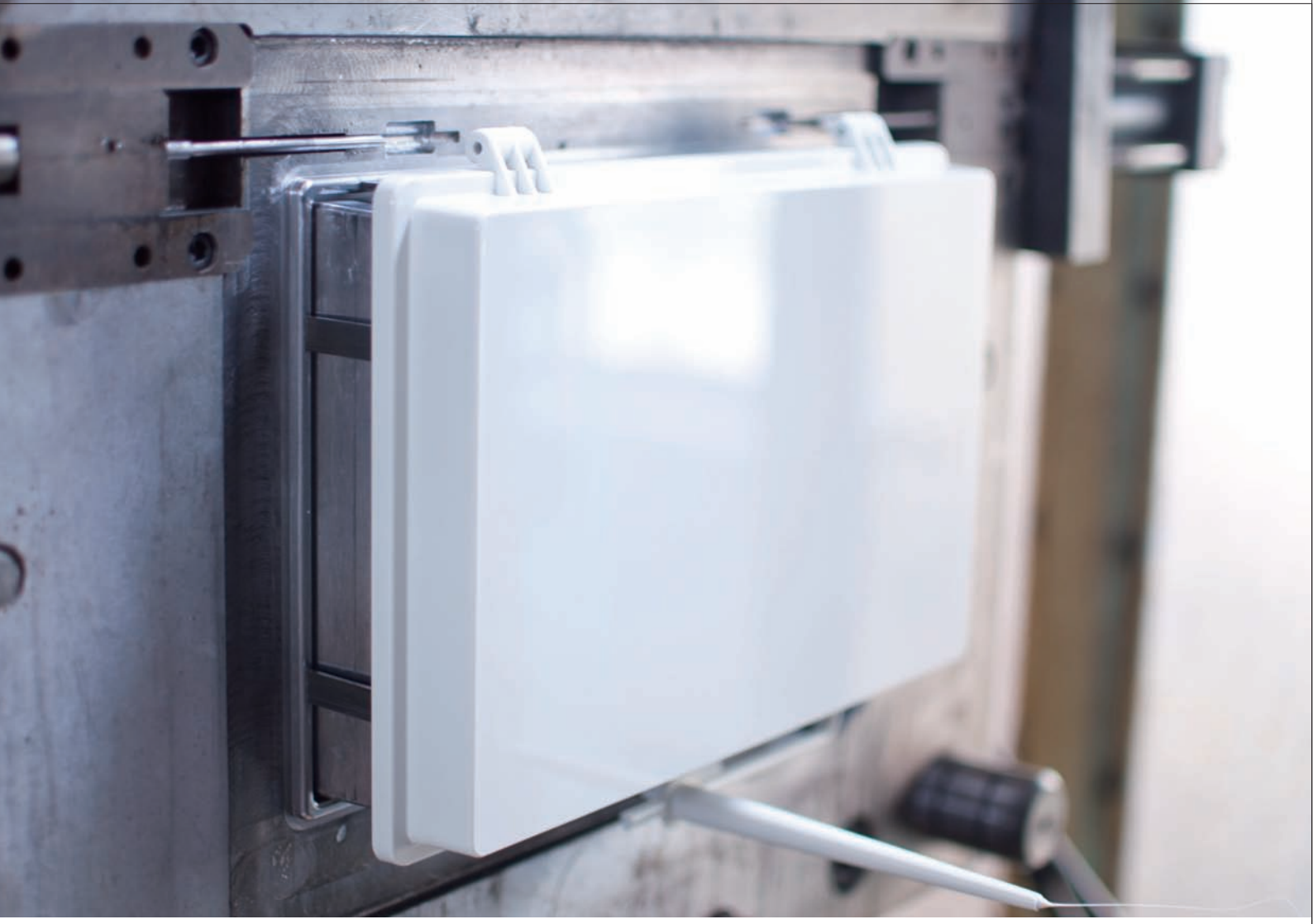

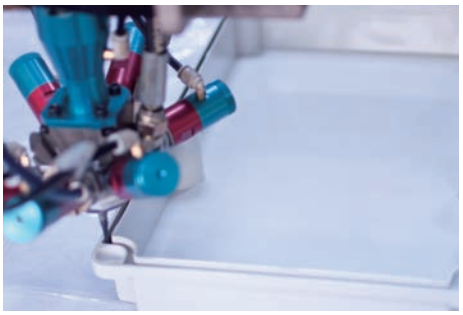

Equipments & Facilities

JIANGSU JIANLONG
ELECTRICAL CO.,LTD.