Etechin

Miniature Circuit Breaker

Perfect Reliable Choice

Etechin

KEMA KEUR

Basic features			
Standards		EN/IEC 60898-1	
Certificate		KEMA/Dekra CE	
Electrical features		**ETM1**	**ETM1-100**
Rated current in	A	10-100	10-100
Rated voltage Ue	V	230/400, 240/415	
Rated frequency	Hz	50/60	
Number of poles	P	1, 2, 3	
Ultimate short-circuit breaking capacity Icu	kA	4.5	
Service short-circuit breaking capacity Ics	kA	4.5	
Rated insulation voltage Ui	V	500	
Rated impulse withstand voltage(1.2/50) Uimp	kV	6	
Dielectric test voltage at ind. Freq. for 1 min	kV	2	
Pollution degree		3	
Trip form		Thermal magnetic trip	
Magnetic release characteristic	D 型 (10In±20%)	■	
Thermal release characteristic	1.13In Non trip cold state	≤ 63A t ≤ 1h, >63A t ≤ 2h	
	1.45In trip after 1.13 test	≤ 63A t<1h, >63A t<2h	
Mechanical features			
Mechanical life	T	10000	
Electrical life	T	4000	
Reference temperature for setting of thermal element	C°	30,40,50	
Ambient temperature	C°	-35~+70C°	
Installation			
Nominal cross-sectional area of the copper conductor	mm^2	35	
Tightening torque	N·m	3	
Line entry		Line-plug in,Load-cable	
Mounting		Mount on plug in type Pan assembly/Busbar	Mount on steel base

Outline and installation dimensions(mm)

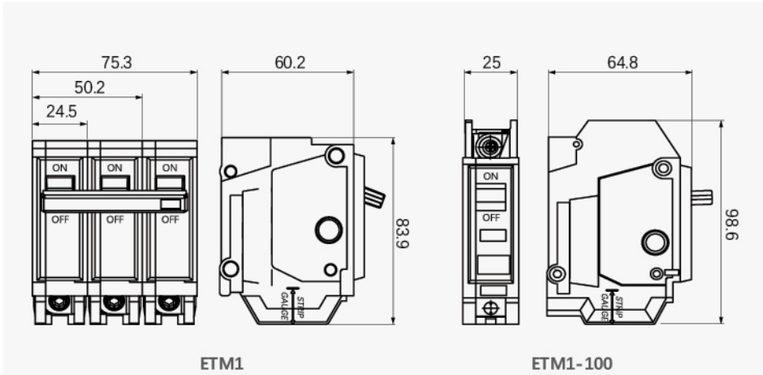

ETM2 Plug-in Type Miniature Circuit Breaker

Basic features			
Standards			EN/IEC 60898-1
Certificate			Dekra/KEMA,CE,CB
Electrical features			
Rated current in		A	6, 10, 16, 20, 25, 32, 40, 50, 63
Rated voltage Ue		V	230/400, 240/415
Rated frequency		Hz	50/60
Number of poles		P	1, 2, 3
Ultimate short-circuit breaking capacity Icu		kA	6/10
Service short-circuit breaking capacity Ics		kA	6kA(Icu 6kA),7.5kA(Icu 10kA)
Rated insulation voltage Ui		V	500
Rated impulse withstand voltage(1.2/50) Uimp		kV	4
Dielectric test voltage at ind. Freq. for 1 min		kV	2
Pollution degree			3
Trip form			Thermal magnetic trip
Thermo-magnetic release characteristic	B type(3-5In)		■
	C type(5-10In)		■
	D type(10-20In)		■
Thermal release characteristic	1.13In Non trip cold state		≤ 63A t ≤ 1h
	1.45In trip after 1.13 test		≤ 63A t<1h
Mechanical features			
Mechanical life		T	10000
Electrical life		T	4000
Reference temperature for setting of thermal element		C°	30,40,50
Ambient temperature		C°	-35~+70C°
Installation			
Nominal cross-sectional area of the copper conductor		mm^2	16
Tightening torque		N·m	2.0
Line entry			Line-plug in,Load-cable
Mounting			Mount on plug in type Pan assembly/Busbar

Outline and installation dimensions(mm)

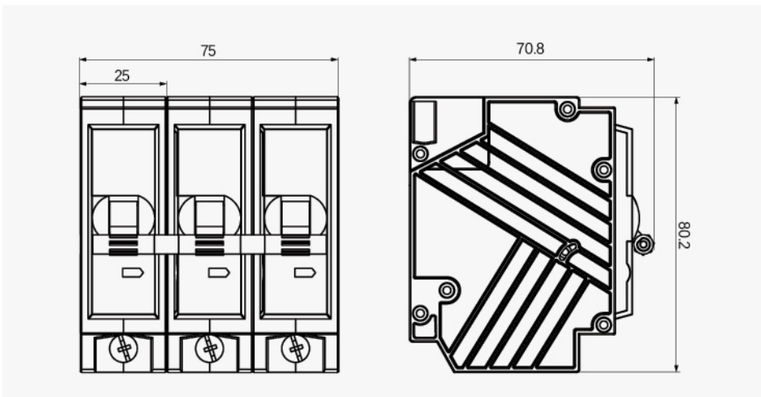

ETM3 Miniature Circuit Breaker

Etechin

Basic features			
Standards			EN/IEC 60898-1
Certificate			Dekra/KEMA CE,CB
Electrical features			
Rated current in		A	6, 10, 16, 20, 25, 32, 40, 50, 63
Rated voltage Ue		V	230/400, 240/415
Rated frequency		Hz	50/60
Number of poles		P	1, 2, 3, 4
Ultimate short-circuit breaking capacity Icu		kA	6/10
Service short-circuit breaking capacity Ics		kA	6kA(Icu 6kA),7.5kA(Icu 10kA)
Rated insulation voltage Ui		V	500
Rated impulse withstand voltage(1.2/50) Uimp		kV	4
Dielectric test voltage at ind. Freq. for 1 min		kV	2
Pollution degree			3
Trip form			Thermal magnetic trip
Thermo-magnetic release characteristic	B type(3-5In)		■
	C type(5-10In)		■
	D type(10-20In)		■
Thermal release characteristic	1.13In Non trip cold state		≤ 63A t ≤ 1h
	1.45In trip after 1.13 test		≤ 63A t<1h
Mechanical features			
Mechanical life		T	10000
Electrical life		T	4000
Reference temperature for setting of thermal element		C°	30,40,50
Ambient temperature		C°	-35~+70C°
Installation			
Nominal cross-sectional area of the copper conductor		mm^2	16
Tightening torque		N·m	2.0
Line entry			U / Pin-type Busbar / Cable
Mounting			on Din rail EN60715(35mm)

Outline and installation dimensions(mm)

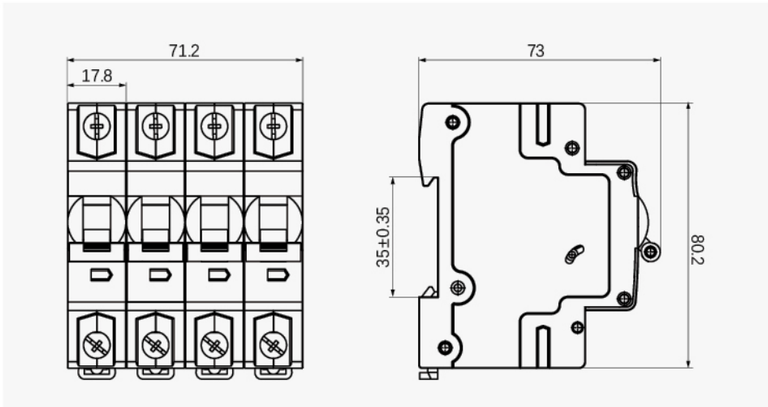

ETM6 Plug-in Type Miniature Circuit Breaker

Basic features			
Standards			EN/IEC 60898-1
Certificate			Dekra/KEMA,CE,CB
Electrical features			
Rated current in		A	6, 10, 16, 20, 25, 32, 40, 50, 63
Rated voltage Ue		V	230/400, 240/415
Rated frequency		Hz	50/60
Number of poles		P	1, 2, 3
Ultimate short-circuit breaking capacity Icu		kA	6/10
Service short-circuit breaking capacity Ics		kA	6kA(Icu 6kA),7.5kA(Icu 10kA)
Rated insulation voltage Ui		V	500
Rated impulse withstand voltage(1.2/50) Uimp		kV	4
Dielectric test voltage at ind. Freq. for 1 min		kV	2
Pollution degree			3
Trip form			Thermal magnetic trip
Thermo-magnetic release characteristic	B type(3-5In)		■
	C type(5-10In)		■
	D type(10-20In)		■
Thermal release characteristic	1.13In Non trip cold state		≤ 63A t ≤ 1h
	1.45In trip after 1.13 test		≤ 63A t<1h
Mechanical features			
Mechanical life		T	10000
Electrical life		T	4000
Reference temperature for setting of thermal element		C°	30,40,50
Ambient temperature		C°	-35~+70C°
Installation			
Nominal cross-sectional area of the copper conductor		mm^2	16
Tightening torque		N·m	2.0
Line entry			Line-plug in,Load-cable
Mounting			Mount on plug in type Pan assembly/Busbar

Outline and installation dimensions(mm)

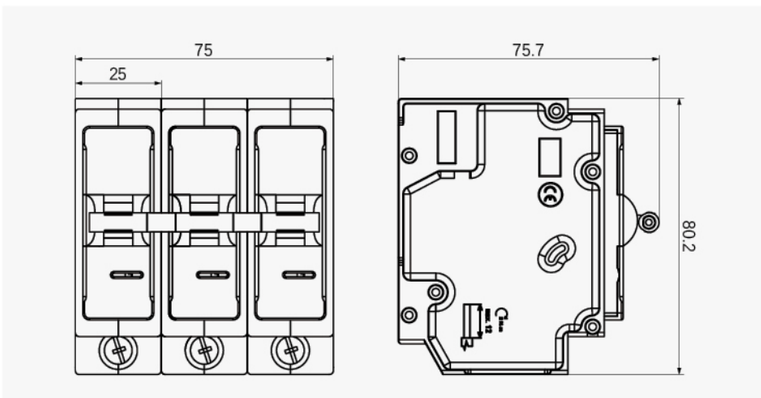

ETM7 Plug-in Type Miniature Circuit Breaker

Etechin

Basic features			
Standards			EN/IEC 60898-1
Certificate			Dekra/KEMA,CE,CB
Electrical features			
Rated current in		A	6, 10, 16, 20, 25, 32, 40, 50, 63
Rated voltage Ue		V	230/400, 240/415
Rated frequency		Hz	50/60
Number of poles		P	1, 2, 3
Ultimate short-circuit breaking capacity Icu		kA	6/10
Service short-circuit breaking capacity Ics		kA	6kA(Icu 6kA),7.5kA(Icu 10kA)
Rated insulation voltage Ui		V	500
Rated impulse withstand voltage(1.2/50) Uimp		kV	4
Dielectric test voltage at ind. Freq. for 1 min		kV	2
Pollution degree			3
Trip form			Thermal magnetic trip
Thermo-magnetic release characteristic	B type(3-5In)		■
	C type(5-10In)		■
	D type(10-20In)		■
Thermal release characteristic	1.13In Non trip cold state		≤ 63A t ≤ 1h
	1.45In trip after 1.13 test		≤ 63A t<1h
Mechanical features			
Mechanical life		T	10000
Electrical life		T	4000
Reference temperature for setting of thermal element		C°	30,40,50
Ambient temperature		C°	-35~+70C°
Installation			
Nominal cross-sectional area of the copper conductor		mm^2	16
Tightening torque		N·m	2.0
Line entry			Line-plug in,Load-cable
Mounting			Mount on plug in type Pan assembly/Busbar

Outline and installation dimensions(mm)

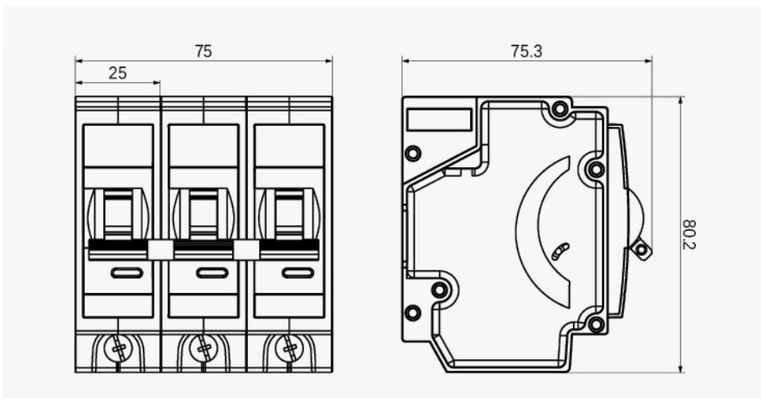

ETM8 Miniature Circuit Breaker

Basic features			
Standards			EN/IEC 60898-1
Certificate			Dekra/KEMA
Electrical features			
Rated current in		A	6, 10, 16, 20, 25, 32, 40, 50, 63
Rated voltage Ue		V	230/400, 240/415
Rated frequency		Hz	50/60
Number of poles		P	1, 2, 3, 4
Ultimate short-circuit breaking capacity Icu		kA	6/10
Service short-circuit breaking capacity Ics		kA	6kA(Icu 6kA),7.5kA(Icu 10kA)
Rated insulation voltage Ui		V	500
Rated impulse withstand voltage(1.2/50) Uimp		kV	4
Dielectric test voltage at ind. Freq. for 1 min		kV	2
Pollution degree			3
Trip form			Thermal magnetic trip
Thermo-magnetic release characteristic	B type(3-5In)		■
	C type(5-10In)		■
	D type(10-20In)		■
Thermal release characteristic	1.13In Non trip cold state		≤ 63A t ≤ 1h
	1.45In trip after 1.13 test		≤ 63A t<1h
Mechanical features			
Mechanical life		T	10000
Electrical life		T	4000
Reference temperature for setting of thermal element		C°	30,40,50
Ambient temperature		C°	-35~+70C°
Installation			
Nominal cross-sectional area of the copper conductor		mm^2	16
Tightening torque		N·m	2.0
Line entry			U / Pin-type Busbar / Cable
Mounting			on Din rail EN60715(35mm)

Outline and installation dimensions(mm)

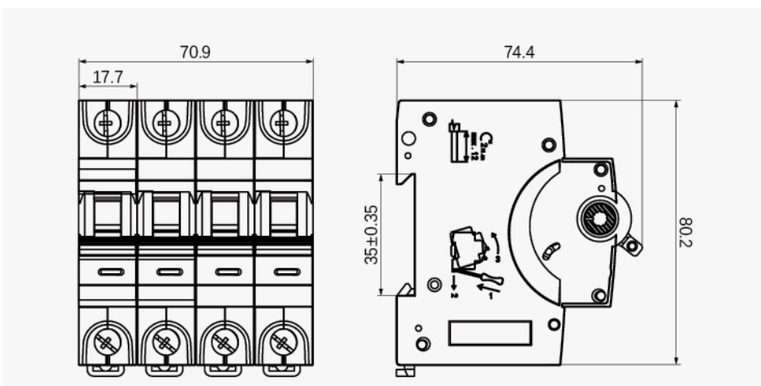

ETM10 Miniature Circuit Breaker

Etechin

Basic features			
Standards			EN/IEC 60898-1
Certificate			Semko ,CE,CB
Electrical features			
Rated current in		A	6,10,16,20,25,32,40,50,63
Rated voltage Ue	1P	V	120V,230/400, 240/415V
	2P, 3P, 4P		120, 230, 240, 400, 415V
Rated frequency		Hz	50/60
Number of poles		P	1, 2, 3, 4
Ultimate short-circuit breaking capacity Icu		kA	6
Service short-circuit breaking capacity Ics		kA	6
Rated insulation voltage Ui		V	500
Rated impulse withstand voltage(1.2/50) Uimp		kV	4
Dielectric test voltage at ind. Freq. for 1 min		kV	2
Pollution degree			3
Trip form			Thermal magnetic trip
Thermo-magnetic release characteristic	B type(3-5In)		■
	C type(5-10In)		■
	D type(10-20In)		■
Thermal release characteristic	1.13In Non trip cold state		≤ 63A t ≤ 1h
	1.45In trip after 1.13 test		≤ 63A t<1h
Mechanical features			
Mechanical life		T	10000
Electrical life		T	4000
Reference temperature for setting of thermal element		C°	30,40,50
Ambient temperature		C°	-35~+70C°
Installation			
Nominal cross-sectional area of the copper conductor		mm^2	16
Tightening torque		N·m	2.0
Line entry			Line-plug in,Load-cable
Mounting			on Din rail EN60715(35mm)

Outline and installation dimensions(mm)

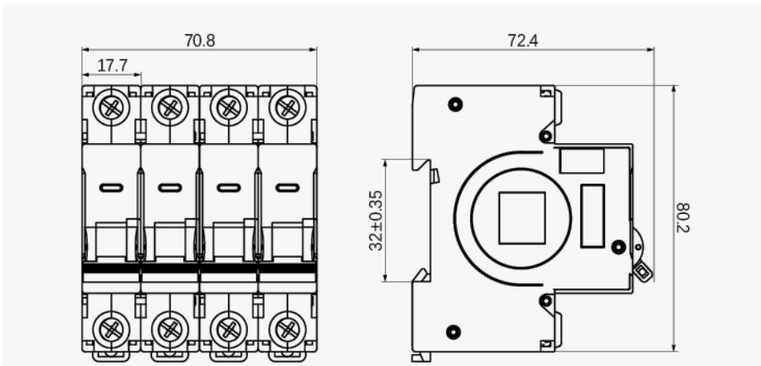

ETM12 Plug-in Type Miniature Circuit Breaker

Basic features			
Standards			EN/IEC 60898-1
Certificate			Semko ,CE,CB
Electrical features			
Rated current in		A	6,10,16,20,25,32,40,50,63
Rated voltage Ue	1P	V	120V,230/400. 240/415
	2P, 3P		120, 230, 240, 400, 415V~
Rated frequency		Hz	50/60
Number of poles		P	1, 2, 3
Ultimate short-circuit breaking capacity Icu		kA	6
Service short-circuit breaking capacity Ics		kA	6
Rated insulation voltage Ui		V	500
Rated impulse withstand voltage(1.2/50) Uimp		kV	4
Dielectric test voltage at ind. Freq. for 1 min		kV	2
Pollution degree			3
Trip form			Thermal magnetic trip
Thermo-magnetic release characteristic	B type(3-5In)		■
	C type(5-10In)		■
	D type(10-20In)		■
Thermal release characteristic	1.13In Non trip cold state		≤ 63A t ≤ 1h
	1.45In trip after 1.13 test		≤ 63A t<1h
Mechanical features			
Mechanical life		T	10000
Electrical life		T	4000
Reference temperature for setting of thermal element		C°	30,40,50
Ambient temperature		C°	-35~+70C°
Installation			
Nominal cross-sectional area of the copper conductor		mm^2	16
Tightening torque		N·m	2.0
Line entry			plug in
Mounting			Mount on plug in type Pan assembly/Busbar

Outline and installation dimensions(mm)

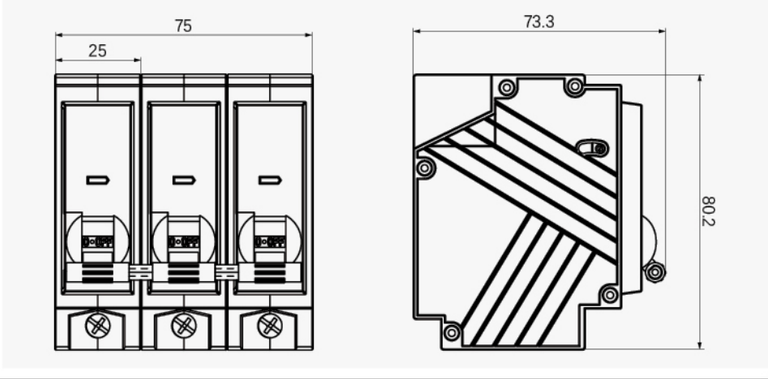

ETM8-125 Miniature Circuit Breaker (27mm width)

Etechin

Basic features			
Standards			EN/IEC 60898-1
Electrical features			
Rated current in		A	63, 80, 100, 125
Rated voltage Ue		V	230, 240, 230/400, 240/415, 400, 415
Rated frequency		Hz	50/60
Number of poles		P	1, 2, 3, 4
Ultimate short-circuit breaking capacity Icu		kA	10kA/IEC60898-1
Service short-circuit breaking capacity Ics		kA	7.5kA/IEC60898-1
Rated insulation voltage Ui		V	500
Rated impulse withstand voltage(1.2/50) Uimp		kV	4
Dielectric test voltage at ind. Freq. for 1 min		kV	2
Pollution degree			3
Trip form			Thermal magnetic trip
IEC60898-1			
Magnetic release characteristic	B type(3-5In)		X
	C type(5-10In)		■
	D type(10-20In)		■
Thermal release characteristic	1.13In Non trip cold state		>63A t ≤ 2h
	1.45In trip after 1.13 test		>63A t < 2h
Magnetic release characteristic	Li=10In±20%		8In non trip t ≤ 0.2S,12In trip t<0.2s
Thermal release characteristic	Li=10In / 1.05In Non trip		>63A t ≤ 2h
	1.3In Trip		>63A t < 2h
Mechanical features			
Mechanical life		T	20000
Electrical life		T	10000 (In>100A)
Reference temperature for setting of thermal element		C°	40,50
Ambient temperature		C°	-35~+70C°
Installation			
Nominal cross-sectional area of the copper conductor		mm^2	50
Tightening torque		N·m	3.5
Line entry			From top and bottom
Mounting			On Din rail EN60715(35mm)

Outline and installation dimensions(mm)

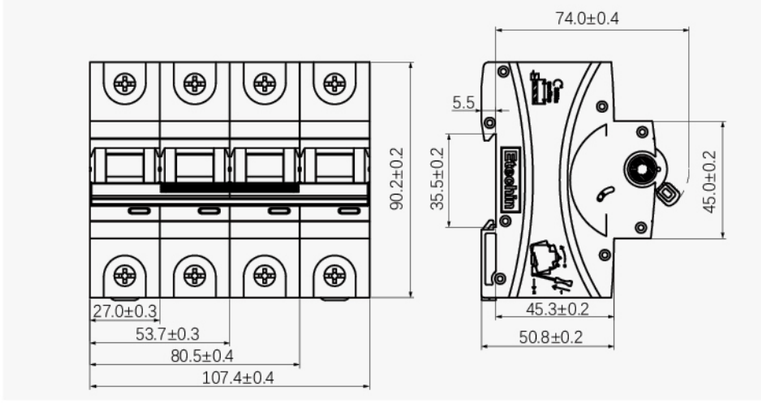

ETM20-125 Residual Current Circuit Breaker (18mm width)

Basic features			
Standards			EN/IEC 60898-1
Electrical features			
Rated current in		A	80, 100, 125
Rated voltage Ue		V	230, 240, 230/400, 240/415, 400, 415
Rated frequency		Hz	50/60
Number of poles		P	1, 2, 3, 4
Ultimate short-circuit breaking capacity Icu		kA	6kA
Service short-circuit breaking capacity Ics		kA	6kA
Rated insulation voltage Ui		V	500
Rated impulse withstand voltage(1.2/50) Uimp		kV	4
Dielectric test voltage at ind. Freq. for 1 min		kV	2
Pollution degree			3
Trip form			Thermal magnetic trip
IEC60898-1			
Magnetic release characteristic	B 型 (3-5In)		■
	C 型 (5-10In)		■
	D 型 (10-20In)		■
Thermal release characteristic	1.13In Non trip cold state		>63A t ≤ 2h
	1.45In trip after 1.13 test		>63A t < 2h
Mechanical features			
Mechanical life		T	20000
Electrical life		T	10000 (In>100A)
Reference temperature for setting of thermal element		C°	40,50
Ambient temperature		C°	-35~+70C°
Installation			
Nominal cross-sectional area of the copper conductor		mm^2	50
Tightening torque		N·m	3.5
Line entry			From top and bottom
Mounting			On Din rail EN60715(35mm)

Outline and installation dimensions(mm)

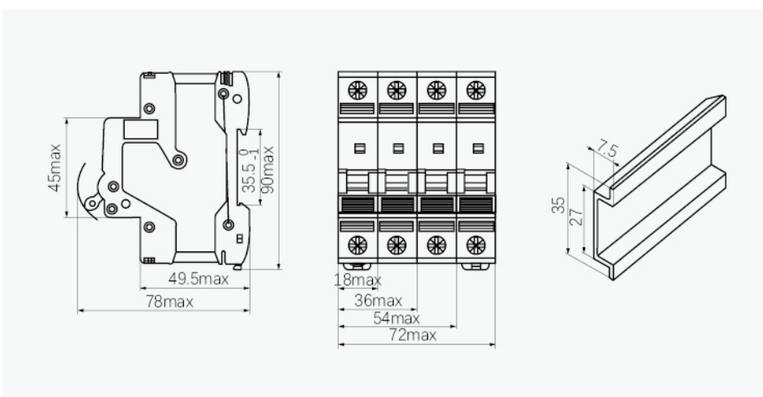

ETM3-125 Miniature Circuit Breaker

Etechin

Basic features			
Standards			EN/IEC 60898-1
Electrical features			
Rated current in		A	80, 100, 125
Rated voltage Ue		V	230, 240, 230/400, 240/415, 400, 415
Rated frequency		Hz	50/60
Number of poles		P	1, 2, 3, 4
Ultimate short-circuit breaking capacity Icu		kA	10kA
Service short-circuit breaking capacity Ics		kA	7.5kA
Rated insulation voltage Ui		V	500
Rated impulse withstand voltage(1.2/50) Uimp		kV	4
Dielectric test voltage at ind. Freq. for 1 min		kV	2
Pollution degree			3
Trip form			Thermal magnetic trip
Mechanical features			
Mechanical life		T	20000
Electrical life		T	10000 (In>100A)
Reference temperature for setting of thermal element		C°	40,50
Ambient temperature		C°	-35~+70C°
Installation			
Nominal cross-sectional area of the copper conductor		mm^2	50
Tightening torque		N·m	3.5
Line entry			From top and bottom
Mounting			On Din rail EN60715(35mm)
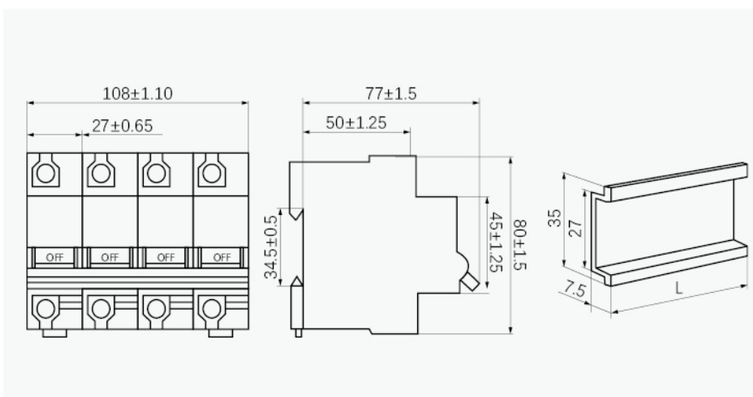
Outline and installation dimensions(mm)